REVISIONS				
LTR	DESCRIPTION	E.C.N.	DATE	BY/APP'D
B	REVISE & REDRAW PER CURRENT STANDARDS; ADD LAND PATTERN RECOMMENDATION	12371	01/04/2000	TL/PS

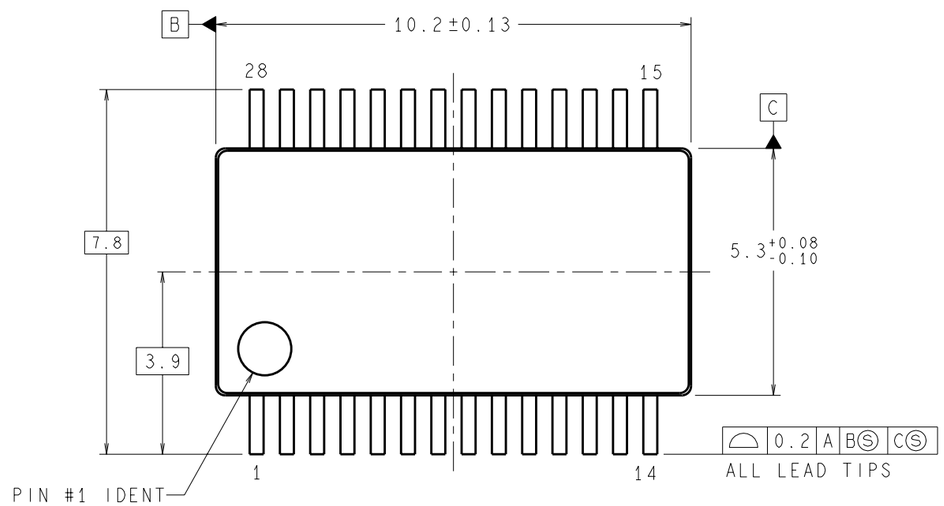

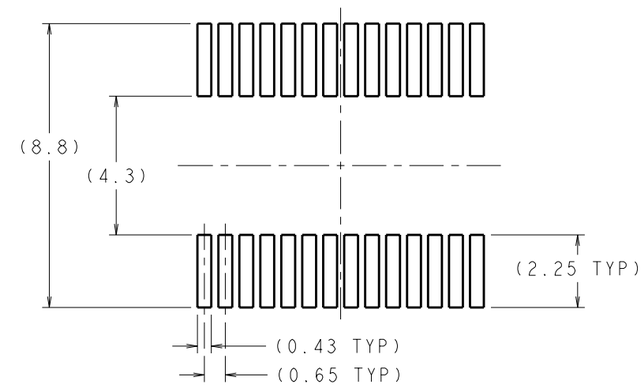

LAND PATTERN RECOMMENDATION

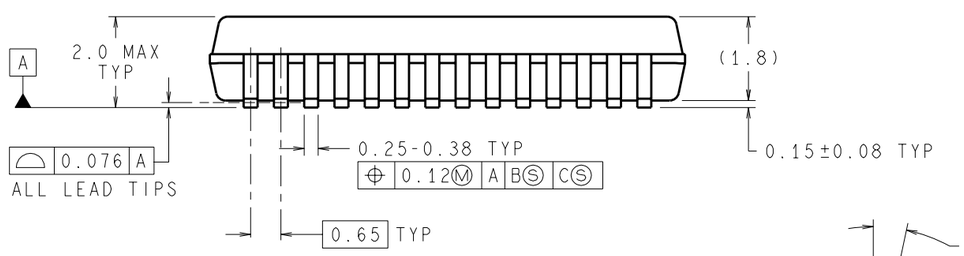

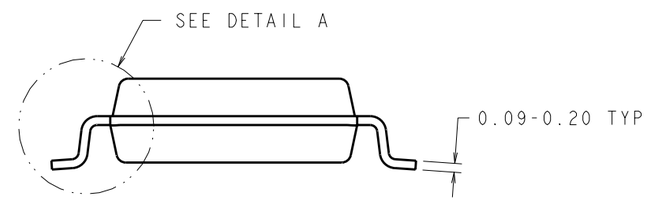

DIMENSIONS ARE IN MILLIMETERS

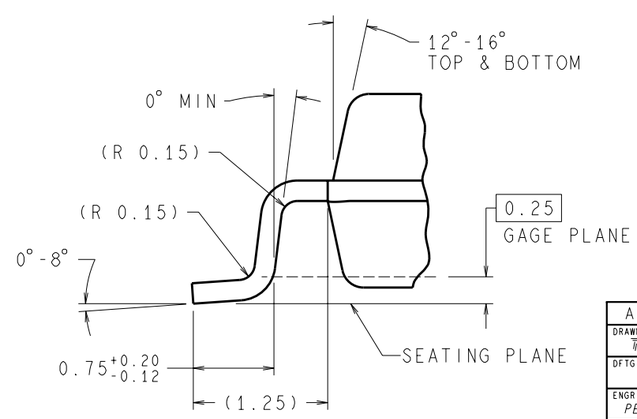

DETAIL A
TYP, SCALE: 30X

APPROVALS	DATE
DRAWN T. LEQUANG	01/04/2000
DFTG. CHK. MARTA SUCHY	01/04/2000
ENGR. CHK. PETER SPALDING	01/04/2000

National Semiconductor
2900 Semiconductor Dr, Santa Clara, CA 95052-8090

MOLDED SSOP,
5.3mm BODY WIDTH, 0.65mm PITCH,
EIAJ, TYPE II, 28 LEAD

PROJECTION INCH [MM]

SCALE	SIZE	DRAWING NUMBER	REV
N/A	C	(SC)MKT-MSA28	B

FORMERLY: N/A

SHEET 1 of 1